# Relay Output Modules

| **F2-08TRS Relay Output** | |
|---|---|
| **Outputs per Module** | 8 |
| **Outputs Points Consumed** | 8 |
| **Commons per Module** | 8 (isolated) |
| **Output Type** | 3, Form C (SPDT)<br>5, Form A (SPST normally open) |
| **Operating Voltage** | 7A @ 12-28 VDC, 12-250 VAC<br>0.5A @ 120VDC |
| **Peak Voltage** | 150 VDC, 265 VAC |
| **ON Voltage Drop** | N/A |
| **AC Frequency** | 47 to 63Hz |
| **Minimum Load Current** | 10mA @ 12 VDC |
| **Max Load Current (resistive)** | 7A/point [3] (subject to derating) |
| **Max Leakage Current** | N/A |
| **Max Inrush Current** | 12A |
| **Base Power Required 5VDC** | 670 mA |
| **OFF to ON Response** | 15 ms (typical) |
| **ON to OFF Response** | 5ms (typical) |
| **Terminal Type (included)** | Removable; D2-16IOCON |
| **Status Indicator** | Logic side |
| **Weight** | 5.5oz. (156g) |
| **Fuses** | None |

### Typical Relay Life[1] (Operations) at Room Temperature

| *Voltage & Type of Load* [2] | *Load Current* 50mA | 5A | 7A |
|---|---|---|---|
| 24 VDC Resistive | 10M | 600k | 300k |
| 24 VDC Solenoid | - | 150k | 75k |
| 110 VDC Resistive | – | 600k | 300k |
| 110 VDC Solenoid | – | 500k | 200k |
| 220 VAC Resistive | – | 300k | 150k |
| 220 VAC Solenoid | – | 250k | 100k |

*1) Contact life may be extended beyond those values shown with the use of arc suppression techniques described in the DL205 User Manual. Since these modules have no leakage current, they do not have built-in snubber. For example, if you place a diode across a 24 VDC inductive load, you can significantly increase the life of the relay.*

*2) At 120 VDC 0.5A resistive load, contact life cycle is 200k cycles.*

*3) Normally closed contacts have 1/2 the current handling capability of the normally open contacts.*

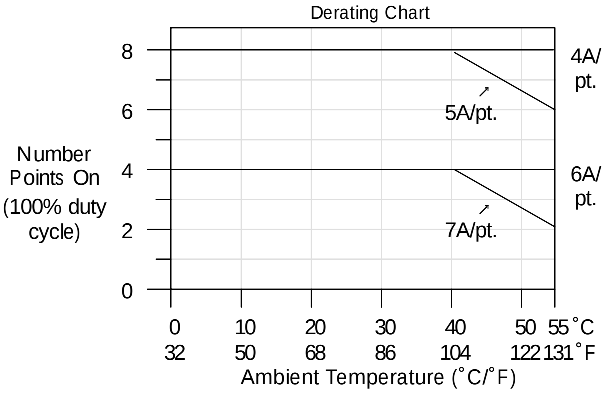

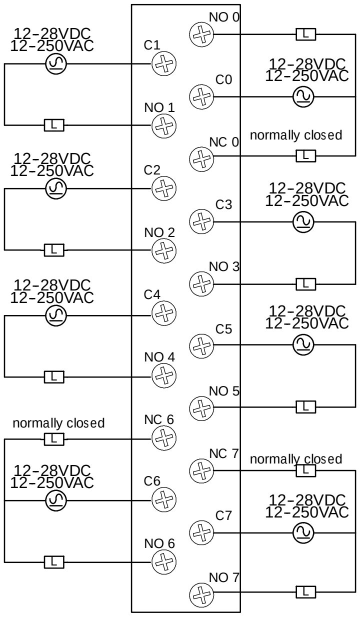
12-28VDC 12-250VAC
C1
NO 0
C0
NO 1
NC 0
normally closed
C2
C3
NO 2
NO 3
C4
C5
NO 4
NO 5
normally closed
NC 6
NC 7
C6
C7
NO 6
NO 7
L

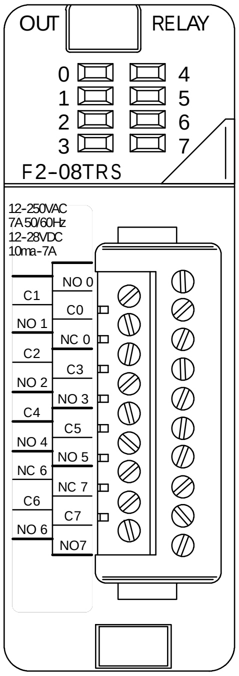
OUT
RELAY
0 1 2 3 4 5 6 7
F2-08TRS
12-250VAC
7A 50/60Hz
12-28VDC
10ma-7A
C1
NO 0
C0
NO 1
NC 0
C2
C3
NO 2
NO 3
C4
C5
NO 4
NO 5
NC 6
NC 7
C6
C7
NO 6
NO7

Typical Circuit
(points 1,2,3,4,5)

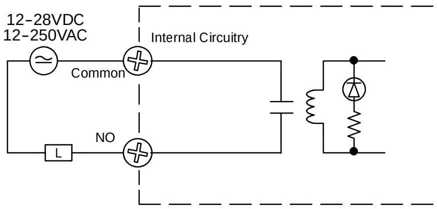
12-28VDC
12-250VAC
Internal Circuitry
Common
NO
L

Typical Circuit
(Points 0, 6, & 7 only)

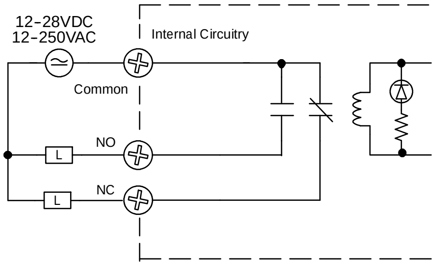
12-28VDC
12-250VAC
Internal Circuitry
Common
NO
NC
L